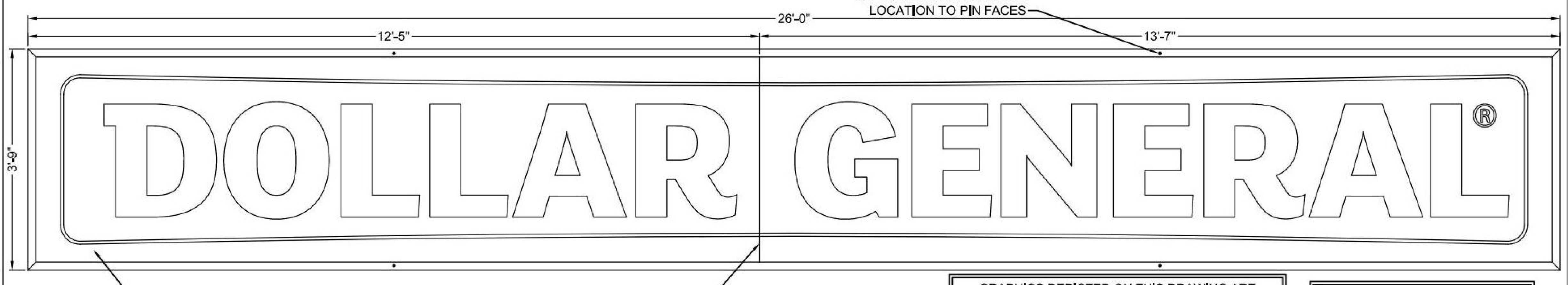


ELEVATION

GRAPHICS DEPICTED ON THIS DRAWING ARE FOR ILLUSTRATIVE PURPOSES ONLY. DO NOT USE THIS DRAWING FOR PRODUCTION ART, REFER TO PRODUCTION ELECTRONIC FILES

ALL EXPOSED FASTENER HEADS SHALL BE PAINTED TO MATCH THE EXTERIOR CABINET FINISH

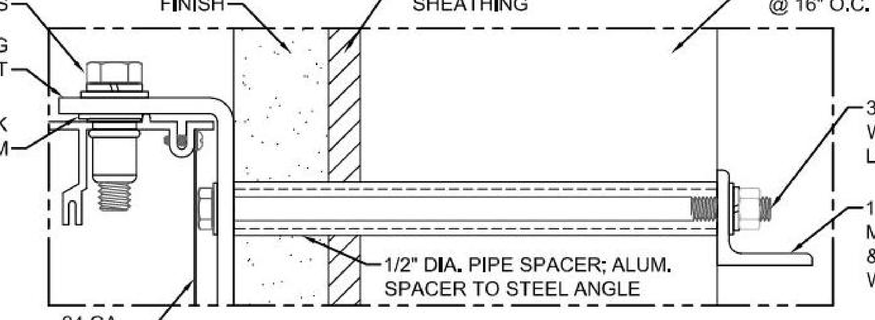


MOUNTING @ FRAMED WALL

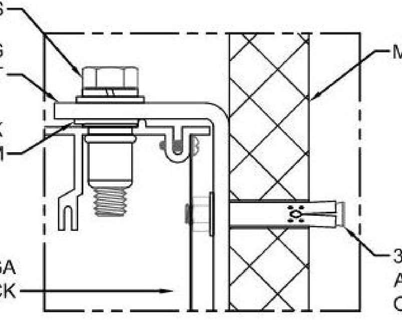


MOUNTING @ MASONRY WALL

NOTES:

1. Design is based on 90 mph 3 second gust design wind speed per IBC 2006. Category II. Exposure C, components & cladding, zone 5.
2. No additional wind catching surfaces are added to the building structure. The customer's building engineer is to determine the adequacy of the supporting structure.
3. Aluminum shall be fabricated from 3003-H14 sheet. Extruded shapes shall be 6063-T6, unless noted otherwise.
4. All fasteners shall be zinc coated to prevent corrosion unless noted otherwise.
5. All wall penetrations shall be sealed to prevent water intrusion.
6. This design is prototypical and should not be used for site specific applications unless reviewed and deemed suitable for use at that site by a competent Professional Engineer.

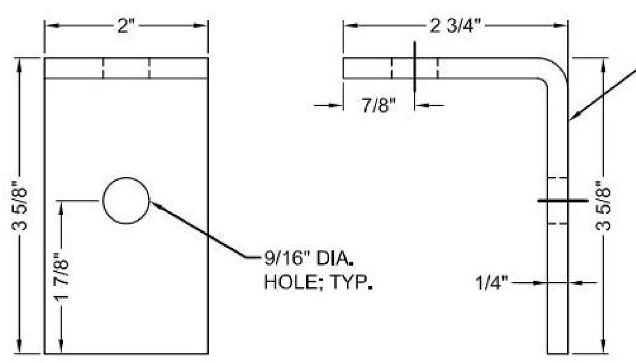


MOUNTING BRACKET DETAIL

| CLIENT: | REV. | DATE | DESCRIPTION | BY: | APR: | | SHT. | BY: | Project Number: |
|---|---|---|---|---|---|---|---|---|---|
| DOLLAR GENERAL | | -/-/- | | - | - | 3'-9"x26'-0" WALL CABINET - 90 MPH | 1 | JBL | 12-0339 |
| | | -/-/- | | - | - | NOTE: All designs and plans indicated on this drawing are the sole property of Dollar General Corporation, created specifically for the noted project. Use of these designs or plans for any purpose other than the intended application shall be prohibited without the written consent of Dollar General Corporation. Disclosure of any of the information enclosed within, without consent of owner, is a violation of intellectual property and shall not be tolerated. | OF 3 | DATE: 06/25/12 | Drawing Number: B314028 |
| | | 09/06/12 | MISC. REVISION PER FEEDBACK | JBL | - | | | | |
| | | 07/27/12 | CHANGED ALL FACE THICKNESSES TO 0.150" | JBL | - | | | | |

LINK Engineering, L.L.C.
135 South David Lane• Knoxville, Tennessee 37922
Phone: (865) 539-4001• Fax: (865) 539-0851
Online: www.linkengr.com

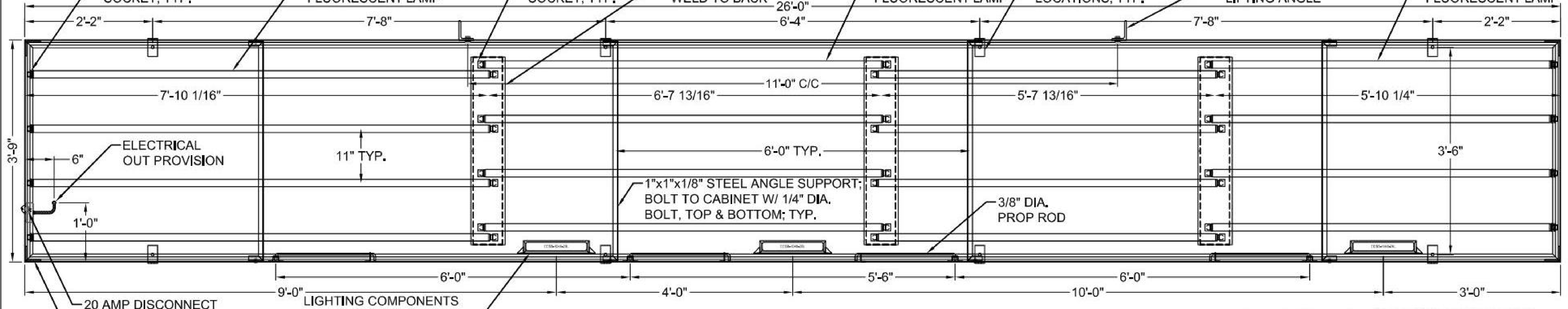


ELEVATION & MOUNTING LOCATION

(2) 1/4" DIA. WEEP HOLES REQ'D @ EACH END OF CABINET

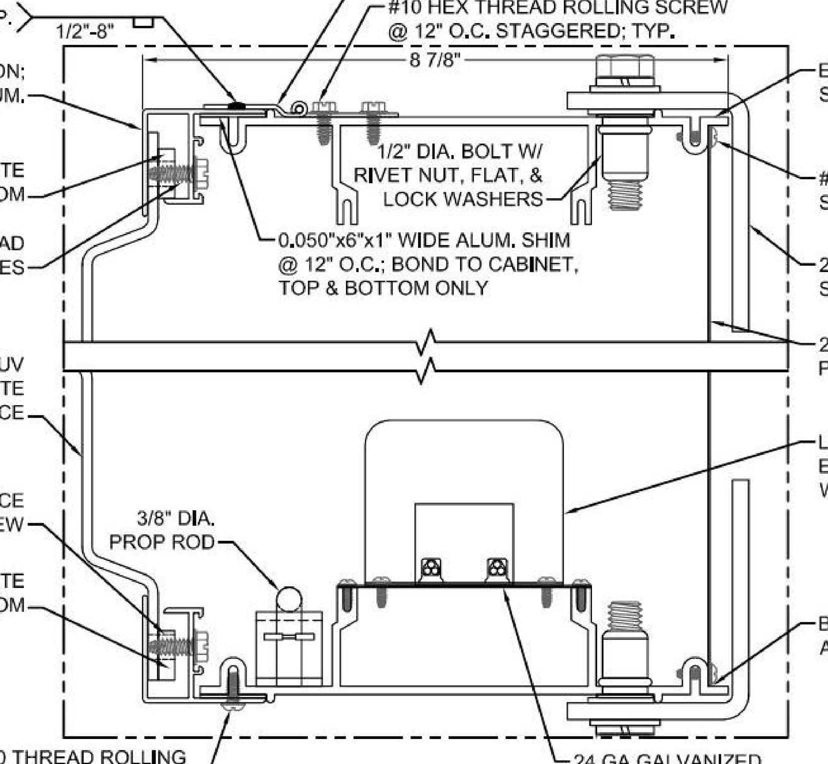


CABINET DETAILS

INTERIOR OF CABINET TO BE PAINTED LACRYL STARBRITE WHITE. RAW EDGES OR UNCOATED SURFACES SHALL NOT BE USED.

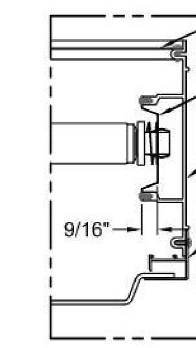


SIDE RACEWAY COVER DETAIL

ELECTRICAL REQUIREMENTS:

LAMPS: (8) F72/T12/CW/HO FLUORESCENT LAMP
(4) F84/T12/CW/HO FLUORESCENT LAMP
(4) F96/T12/CW/HO FLUORESCENT LAMP
BALLAST: (3) LIGHTING COMPONENTS EESB-1048-26L @ 2.5 AMPS
TOTAL LOAD: 7.5A @ 120VAC
CIRCUITS: (1) 20 AMP REQUIRED

| CLIENT: | REV. | DATE | DESCRIPTION | BY: | APR: | | SHT. | BY: | Project Number: |
|---|---|---|---|---|---|---|---|---|---|
| DOLLAR GENERAL | | -/-/- | | - | - | 3'-9"x26'-0" WALL CABINET - 90 MPH | 2 | JBL | 12-0339 |
| | | -/-/- | | - | - | NOTE: All designs and plans indicated on this drawing are the sole property of Dollar General Corporation, created specifically for the noted project. Use of these designs or plans for any purpose other than the intended application shall be prohibited without the written consent of Dollar General Corporation. Disclosure of any of the information enclosed within, without consent of owner, is a violation of intellectual property and shall not be tolerated. | OF 3 | DATE: 06/25/12 | Drawing Number: B314028 |
| | | 09/06/12 | MISC. REVISION PER FEEDBACK | JBL | - | | | | |
| | | 07/27/12 | CHANGED ALL FACE THICKNESSES TO 0.150" | JBL | - | | | | |

LINK Engineering, L.L.C.
135 South David Lane• Knoxville, Tennessee 37922
Phone: (865) 539-4001• Fax: (865) 539-0851
Online: www.linkengr.com

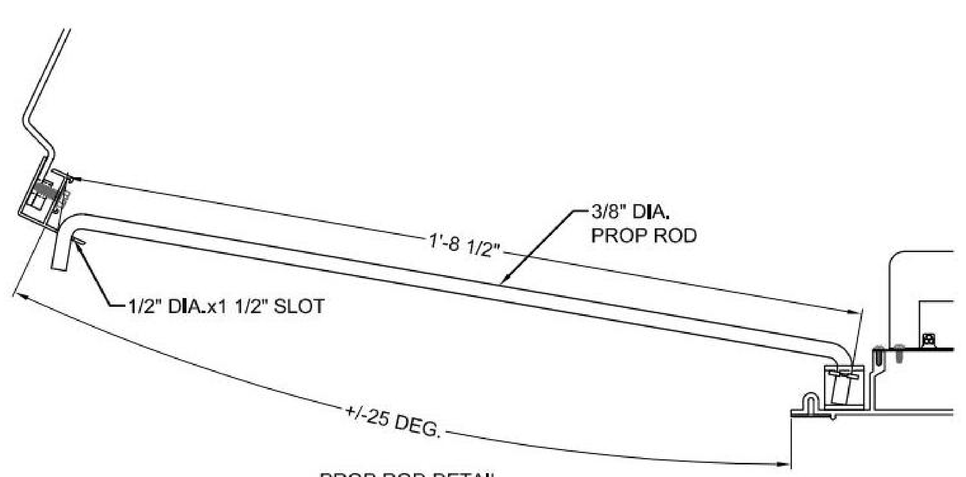


PROP ROD DETAIL

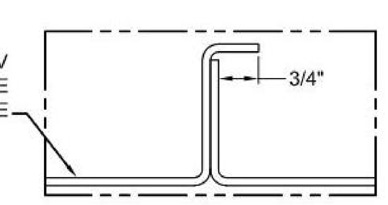


SECTION @ FACE SEAM

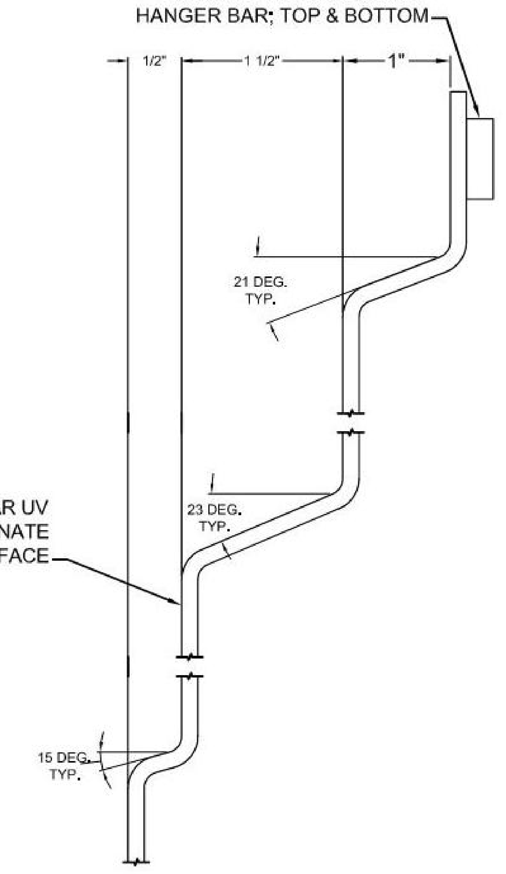


EMBOSSMENT DETAIL

| CLIENT: | REV. | DATE | DESCRIPTION | BY: | APR: | | SHT. | BY: | Project Number: |
|---|---|---|---|---|---|---|---|---|---|
| DOLLAR GENERAL | | -/-/- | | - | - | 3'-9"x26'-0" WALL CABINET - 90 MPH | 3 | JBL | 12-0339 |
| | | -/-/- | | - | - | NOTE: All designs and plans indicated on this drawing are the sole property of Dollar General Corporation, created specifically for the noted project. Use of these designs or plans for any purpose other than the intended application shall be prohibited without the written consent of Dollar General Corporation. Disclosure of any of the information enclosed within, without consent of owner, is a violation of intellectual property and shall not be tolerated. | OF 3 | DATE: 06/25/12 | Drawing Number: B314028 |
| | | 09/06/12 | MISC. REVISION PER FEEDBACK | JBL | - | | | | |
| | | 07/27/12 | CHANGED ALL FACE THICKNESSES TO 0.150" | JBL | - | | | | |

LINK Engineering, L.L.C.
135 South David Lane• Knoxville, Tennessee 37922
Phone: (865) 539-4001• Fax: (865) 539-0851
Online: www.linkengr.com

\\RLBA-FS01\8500-8999\8785\878542 MAPLE HEIGHTS OH\ARCH\15 A08 878542.DWG | PLOTTED 10.27.2020 10:45AM BY KATHRYN LESTER

| DATES AND REVISIONS | |
|---|---|
| No. | Date/Description |
| | – |
| | – |
| | – |

DOLLAR GENERAL

Bowen+
2019 Center Street, Suite 500 / Cleveland, Ohio 44113
Phone: (216) 491-9300 Fax: (216) 491-8053
www.rlba.com - email@rlba.com

NOTICE
THIS ARCHITECTURAL AND ENGINEERING DRAWING IS GIVEN IN CONFIDENCE. NO USE OR DISSEMINATION MAY BE MADE WITHOUT PRIOR WRITTEN CONSENT OF THE ARCHITECT. ALL RIGHTS ARE HEREBY SPECIFICALLY RESERVED.
RICHARD L. BOWEN + ASSOCIATES INC. COPYRIGHT YEAR 2019

DOLLAR GENERAL
5510 WARRENSVILLE CENTER RD
MAPLE HEIGHTS, OH

SIGN DETAILS

DRAWN BY: KLL
CHECKED BY: MLL
RLB NO.: 8785.42

DRAWING NO.
A08