New Build Product Information

Data and Install Guides

US LED | 6807 PORTWEST DRIVE | HOUSTON, TX 77024 | T 713 972 9191 | F 713 972 9393 | www.usled.com

Project	Date

Catalog Number	Type

PJF2

Linear LED Strip Light

Key Features

- Available in 2 ft. or 4 ft. models.
- 161,000 hours L70 calculated life.
- Suspended or surface mounted.
- Designed to facilitate easier installations.
- Industry leading 10-Year warranty.

Construction

- Housing is constructed from steel in a standard white finish.
- Lens is frosted acrylic for uniform light distribution that's glare-free.
- End caps are high-impact injection molded PMMA material.

Electrical

- 120VAC input.
- Operating temperature: -30°C to +40°C (-22°F to +104°F)

Optics

- Industry leading LEDs in 3500K, 4000K, or 5000K CCT (minimum 80 CRI).
- Lumen Maintenance >161,000 hours (L70) [1]

Mounting

- Luminaire is ready to be suspended or surface mounted.

Warranty

- Backed by US LED's industry leading 10-year warranty.

Product Performance Summary

Lumen Output	Up to 6,440 lumens
Efficacy	Up to 150 LPW
CRI	≥ 80 CRI
Available CCT	3500K, 4000K, or 5000K
Warranty	10-Year Warranty

Product Overview

Utilizing patented LED technology, the PJF2 is a low-profile linear solution that offers outstanding value and energy efficiency without compromising illumination. Designed for versatility, the PJF2 provides best-in-class performance for virtually any indoor lighting need. It's Ideal for lighting up manufacturing, commercial, warehouse, retail, or other display applications.

Product Applications

- Educational Facilities
- Convenience Stores
- Office Spaces
- Hallways/Corridors
- Industrial/Warehouse
- Mall/Retail Areas
- Health Care Facilities
- Commercial Spaces

Product Certifications/Approvals

- ETL Listed for US & Canada.
- Complies with UL1598 and CSA 22.2
- DLC Premium Listed.
- Suitable for indoor damp Locations
- RoHS Compliant

Ordering Information

Example: PJF2-1-4-UNVL-35-50

Series	Variant	Size	Input Voltage	Power	CCT	Battery Back-Up
PJF2						
	1 Standard	**2** 2 ft.	**UNVL** 120-277V	**15** [2] 15W	**35** 3500K	**Blank** No Battery Back-Up
		4 4 ft.		**35** 35W	**40** 4000K	**B** [3] Integrated Battery Back-Up
				46 46W	**50** 5000K	

1. US LED product 'Lifetimes' refer only to the LED light engine, not the power source, and are based on the Illuminating Engineering Society's TM21 Projected Lumen Maintenance methodology at a 25° C / 77° F ambient temperature. The lifetimes are solely meant to be a guide for expected LED degradation and not a warranty or predictive of their actual life, which can be affected by ambient temperatures and other factors.
2. Only available with 2 ft. option.
3. Only available with 4 ft. option.

PJF2

Linear LED Strip Light

Dimensions

2 ft. Model (Side View)

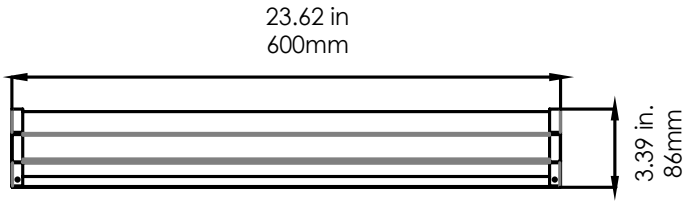

4 ft. Model (Side View)

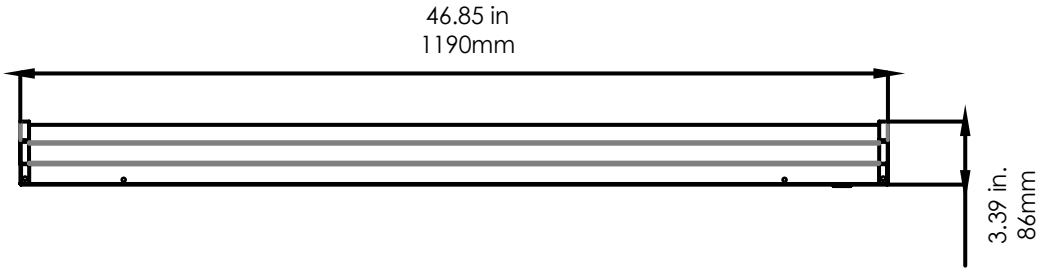

Mounting

PJF2-AC-10 **10 ft. Cable Mounting Kit - Set of 2**

(Sold Separately)

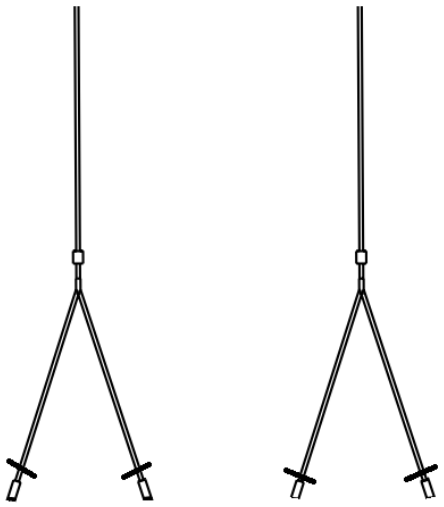

30200 **20 ft. Aircraft Cable Mounting Kit**

30202 **10 ft. Aircraft Cable Mounting Kit**

(Power Cable Required, Sold Separately)

www.usled.com | 866-972-9191 | customerservice@usled.com

Due to continued product improvements, product specifications are subject to change without notice. Please visit www.usled.com for the most updated product specifications.

PJF2

Linear LED Strip Light

USLED
Always the Right Choice!

Performance Data

Luminaire Photometric Data

Model Number	**PJF2-1-4-UNVL-35-XX-X**
Issue Date	**03/12/2020**
IESNA	**LM-63-2002**
Lamp	**LED**
Total Input Watts	**35**
Total Lumens	**5,075**
Efficacy	**145 LPW**
Spacing Criterion	**0º-180º = 1.70 | 90º-270º = 1.44**

Zonal Lumen Summary

Zone	Lumens	% Fixt
0-30	1215.96	23.35
0-40	1994.25	38.29
0-60	3563.90	68.43
0-90	4853.25	93.19
0-180	5208.78	100.00

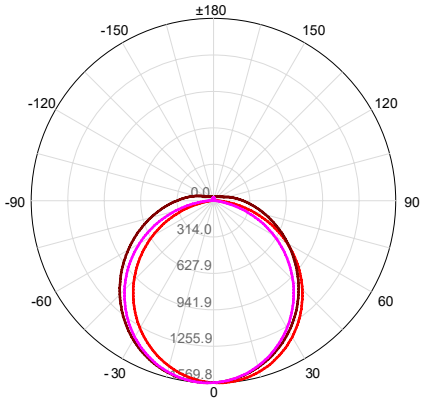

Model	System Level Power	Delivered Lumens	Efficacy	CCT	L70 Calculate Life	L85 Calculate Life
PJF2-1-2-UNVL-15-35-X	15W	2,175L	145 LPW	3500K	161,000 Hours	75,000 Hours
PJF2-1-2-UNVL-15-40-X	15W	2,250L	150 LPW	4000K	161,000 Hours	75,000 Hours
PJF2-1-2-UNVL-15-50-X	15W	2,250L	150 LPW	5000K	161,000 Hours	75,000 Hours
PJF2-1-4-UNVL-35-35-X	35W	4,900L	140 LPW	3500K	161,000 Hours	75,000 Hours
PJF2-1-4-UNVL-35-40-X	35W	5,075L	145 LPW	4000K	161,000 Hours	75,000 Hours
PJF2-1-4-UNVL-35-50-X	35W	5,075L	145 LPW	5000K	161,000 Hours	75,000 Hours
PJF2-1-4-UNVL-46-35-X	46W	6,348L	138 LPW	3500K	161,000 Hours	75,000 Hours
PJF2-1-4-UNVL-46-40-X	46W	6,440L	140 LPW	4000K	161,000 Hours	75,000 Hours
PJF2-1-4-UNVL-46-50-X	46W	6,440L	140 LPW	5000K	161,000 Hours	75,000 Hours

Accessories

OPTION B

PJF2 Shown With An Integrated Emergency Battery Back-Up

www.usled.com | 866-972-9191 | customerservice@usled.com

Due to continued product improvements, product specifications are subject to change without notice. Please visit www.usled.com for the most updated product specifications.

WIRING DIAGRAM

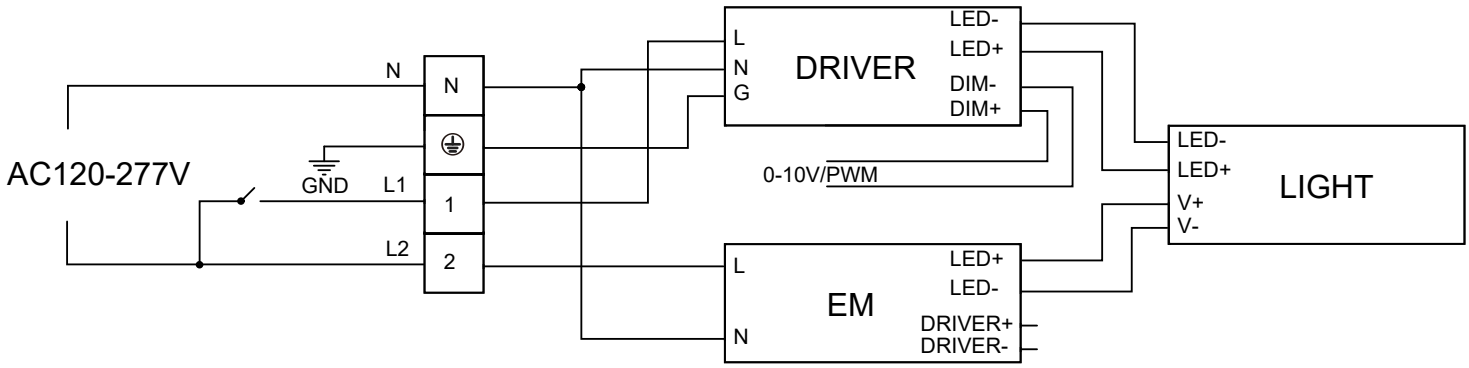

PJF2

INSTALLATION INSTRUCTIONS

IMPORTANT SAFETY WARNINGS

THE INSTALLATION MUST ONLY BE PERFORMED BY A LICENSED ELECTRICIAN. TO PREVENT DEATH, INJURY OR DAMAGE TO PROPERTY, THIS PRODUCT MUST BE INSTALLED IN ACCORDANCE TO NATIONAL ELECTRIC CODE (NFPA70) IN THE US OR CANADIAN ELECTRICAL CODE (CSA22.1) IN CANADA.

L'INSTALLATION NE DOIT ÊTRE EFFECTUÉE QUE PAR UN ÉLECTRICIEN AGRÉÉ. POUR PRÉVENIR LES DÉCÈS, LES BLESSURES OU LES DOMMAGES MATÉRIELS, CE PRODUIT DOIT ÊTRE INSTALLÉ CONFORMÉMENT AU CODE NATIONAL DE L'ÉLECTRICITÉ (NFPA70) AUX USA OU CODE CANADIEN DE L'ÉLECTRICITÉ (CSA22.1) AU CANADA.

CONSULT A QUALIFIED ELECTRICIAN TO ENSURE CORRECT BRANCH CIRCUIT CONDUCTOR.

CONSULTER UN ÉLECTRICIEN QUALIFIÉ POUR VOUS ASSURER QUE LES CONDUCTEURS DE LA DÉRIVATION SONT ADÉQUATS.

SUITABLE FOR DAMP LOCATIONS. SUITABLE FOR OPERATION IN AMBIENT NOT EXCEEDING 45°C.

CONVIENT AUX EMPLACEMENTS HUMIDES. PEUT ÊTRE UTILISÉ À UNE TEMPÉRATURE AMBIANTE N'EXCÉDANT PAS 45°C.

CAUTION – RISK OF FIRE. MIN 90°C SUPPLY CONDUCTORS. CLASS 2. CLASS 1 WIRE ONLY.

ATTENTION – RISQUE D'INCENDIE. LES FILS D'ALIMENTATION 90 °C MIN. CLASSE 2. CLASSE 1 FIL SEULEMENT.

- To reduce the risk of death, personal injury or property damage from fire, electric shock, falling parts,cuts/abrasions, and other hazards please read all warnings and instructions included with and on the fixture box and all fixture labels.
- Follow all manufacturer's warnings, recommendations and restrictions for: driver type, burning position,mounting locations/methods, replacement and recycling.
- Wear gloves and safety glasses at all times when removing luminaire from carton, installing, servicing or performing maintenance.
- Disconnect or turn off power before installation or servicing the luminaire.
- Allow lamp/fixture to cool before handling.
- Do not exceed maximum wattage marked on the label.
- Do not operate in close proximity to persons, combustible materials or substances affected by heat or drying.
- Verify that supply voltage is correct by comparing it with the luminaire label information.
- All wiring connections should be capped with UL approved recognized wire connectors.
- DO NOT INSTALL DAMAGED PRODUCT! This luminaire has been properly packed so that no parts should have been damaged during transit. Inspect to confirm. Any part damaged or broken during or after assembly should be replaced.
- Maintenance of the luminaires should be performed by person(s) familiar with the luminaires' construction and operation and any hazards involved. Regular fixture maintenance programs are recommended.
- It will occasionally be necessary to clean the outside of the refractor/lens. Frequency of cleaning will depend on ambient dirt level and minimum light output which is acceptable to user. Refractor/lens should be washed in a solution of warm water and any mild, non-abrasive household detergent, rinsed with clean water and wiped dry.
- Should optical assembly become dirty on the inside, wipe refractor/lens and clean in above manner, replacing damaged gaskets as necessary.
- These instructions do not purport to cover all details or variations in equipment nor to provide every possible contingency to meet in connection with installation, operation, or maintenance.

Specifications and dimensions subject to change without notice.

CEILING INSTALLATION INSTRUCTIONS

1. Attach (2) snap joins to the ceiling with supplied bolts.

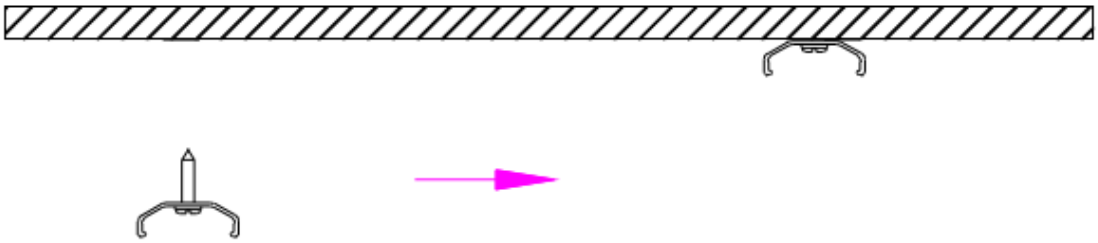

2. Install the PJF2 luminaire onto the (2) snap joints.

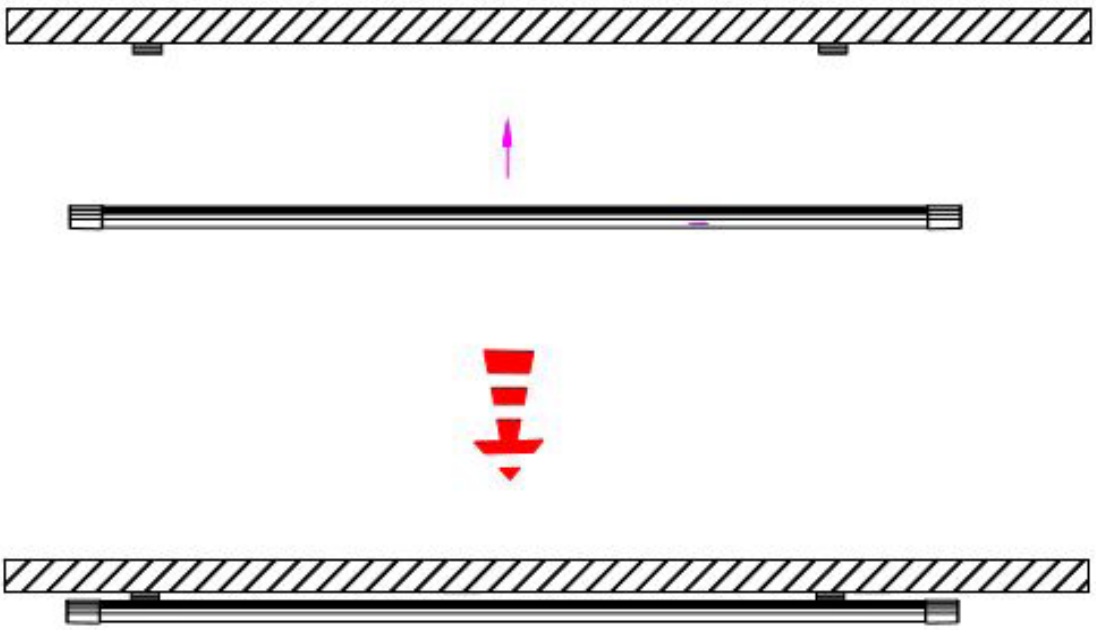

Specifications and dimensions subject to change without notice.

SUSPENDED INSTALLATION INSTRUCTIONS

1. Slide one the supplied crimps onto the wire rope all the way down until the ball at the bottom of the rope stops it (Figure 1). Assemble the wire ropes into the supplied snap points (Figure 2). Attach the wire ropes to the ceiling using second supplied crimp or other hardware by others (Figure 3).

(Figure 1)

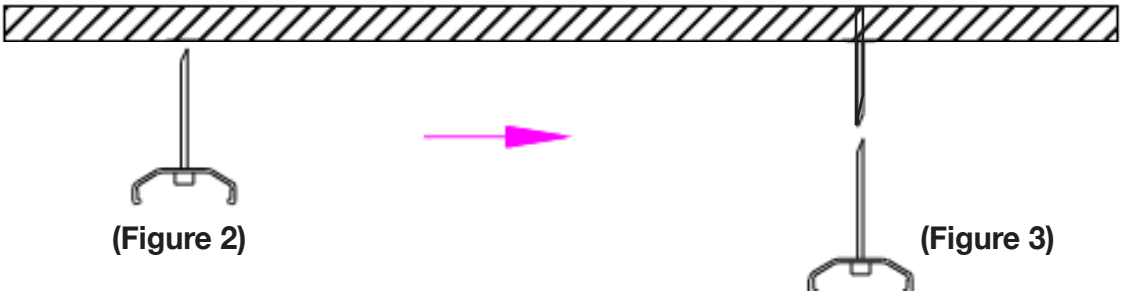

(Figure 2) **(Figure 3)**

2. Install the PJF2 luminaire onto the (2) snap joints.

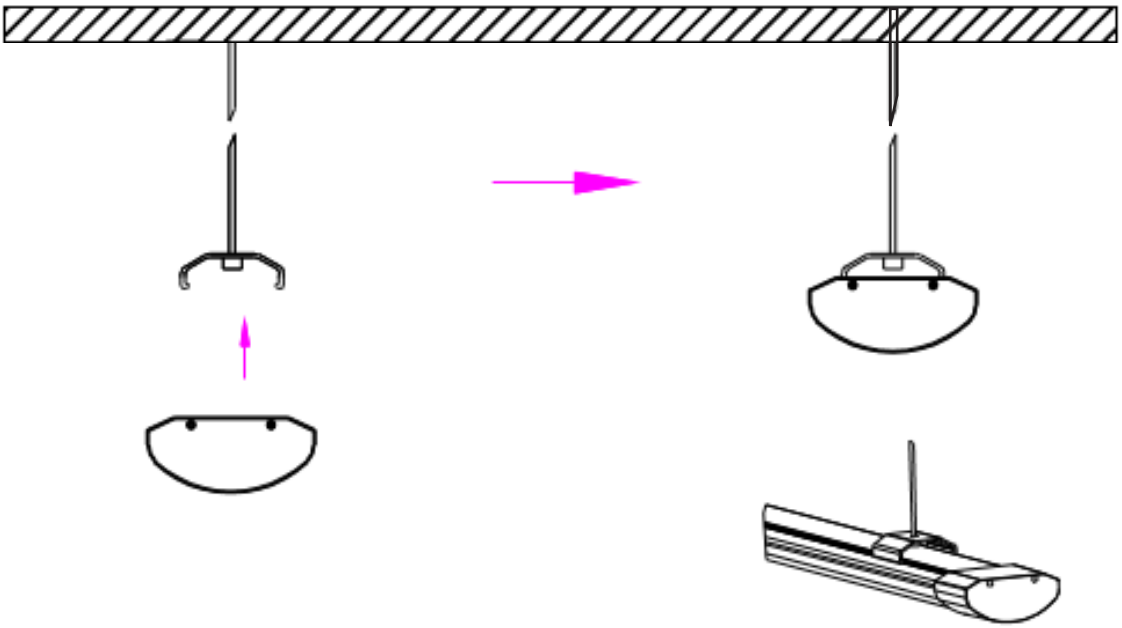

Project	Date

Catalog Number	Type

QubePAK Regal 3

Architectural Outdoor LED Wall Pack

Key Features

- Modern LED replacement for traditional fluorescent or HID fixtures.
- Elegant yet rugged construction effortlessly integrates with existing architecture.
- Adjustable, full-cutoff design with a tilt mechanism that allows for precise aiming.
- Night sky friendly: eliminates light pollution and minimizes glare.
- Industry leading 10-Year warranty.

Construction

- Robust die-cast aluminum housing protects integral components from harsh environments and optimizes thermal management.
- Housing is protected by a corrosion resistant bronze powder coat finish.
- IP65 rated enclosure prevents intrusion from environmental elements that could degrade performance.

Electrical

- 120-277VAC. 0-10V dimming standard. [2]
- System power factor >90% and THD <20%.
- Photocell/motion sensor available.
- Operating temperature: -40°C to +40°C (-40°F to +104°F)

Optics

- Type II or Type IV optical distribution.
- Industry leading LEDs with 3000K, 4000K, and 5000K CCT (minimum 70 CRI).
- Lumen Maintenance: 100,000 hours (L70) [1]

Mounting

- Luminaire is ready to be surface mounted.

Warranty

- Backed by US LED's industry leading 10-year warranty.

Product Performance Summary

Lumen Output	Up to 14,007 lumens
Efficacy	Up to 142 LPW
CRI	≥ 70 CRI
Available CCT	3000K, 4000K & 5000K
Warranty	10-Year Warranty

Product Overview

The QubePAK Regal 3 LED wall pack is designed to easily integrate into any existing architecture and provide superior illumination. With two optical distributions, the QubePAK Regal 3 provides a complete site-wide solution for commercial exterior applications. Its elegant aesthetics combined with first-class performance make it a popular choice with specifiers and lighting designers.

Product Applications

- Perimeter Areas
- Building Exteriors
- Security Lighting
- Wall Washing
- Parking Lots
- Educational Facilities
- Business Campuses
- Industrial Facilities
- Mall/Retail Exteriors
- General Lighting

Product Certifications/Approvals

- UL Listed
- Complies with UL1598 and CSA C22.2
- DLC Premium Listed
- Suitable for Wet Locations
- IP65 Rated Enclosure
- RoHS Compliant

Ordering Information

Example: WPR3-UNVL-37W-2-50-BZ

WPR3									
Series	Input Voltage		Power		Optics		CCT		Finish	
	UNVL	120-277V	37	37W [2]	2	Type 2	30	3000K	BZ	Bronze
			58	58W	4	Type 4	40	4000K		
			70	70W			50	5000K		
			100	100W						

1. US LED product 'Lifetimes' refer only to the LED light engine, not the power source, and are based on the Illuminating Engineering Society's TM21 Projected Lumen Maintenance methodology at a 25° C / 77° F ambient temperature. The lifetimes are solely meant to be a guide for expected LED degradation and not a warranty or predictive of their actual life, which can be affected by ambient temperatures and other factors.
2. 37W model is non-dimmable.

QubePAK Regal3

Architectural Outdoor LED Wall Pack

USLED
Always the Right Choice!

Dimensions

37W Model

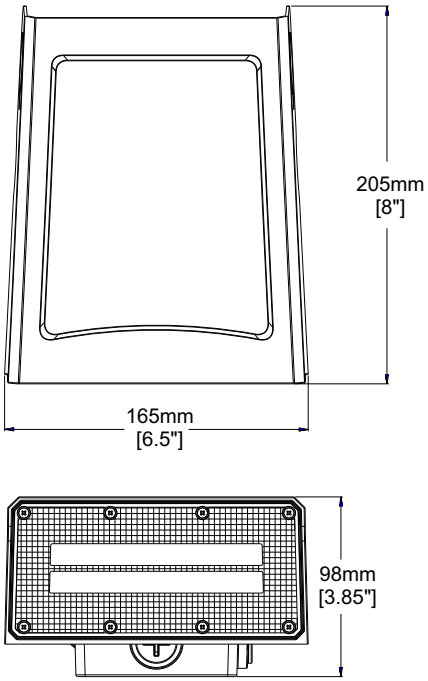

Model	Net Weight
37W	2.87 lbs. (1.3kg)

58W Model

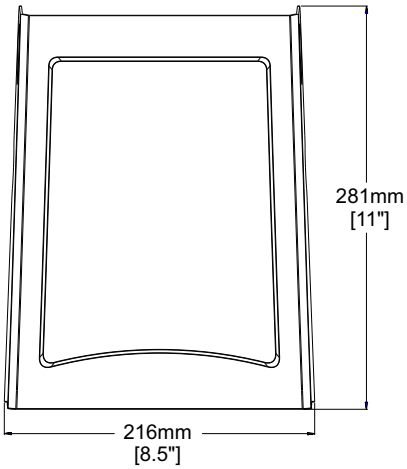

Model	Net Weight
58W	4.63 lbs. (2.1kg)

70-100W Models

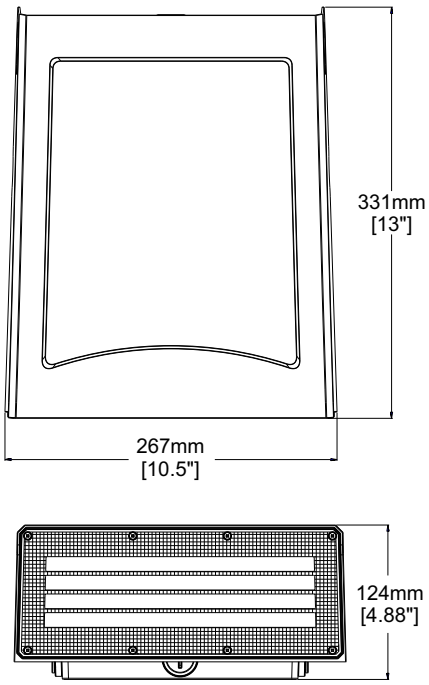

Model	Net Weight
70-100W	5.95 lbs. (2.7kg)

Performance Data

Model	Available CCT	System Level Power	Delivered Lumens	Efficacy	L70 Calculate Life
WPR3-UNVL-37-X-XX-BZ	3000K/4000K/5000K	37.1W	4,701 lm	126 LPW	100,000 Hours
WPR3-UNVL-58-X-XX-BZ	3000K/4000K/5000K	58.4W	7,695 lm	132 LPW	100,000 Hours
WPR3-UNVL-70-X-XX-BZ	3000K/4000K/5000K	71.8W	10,201 lm	142 LPW	100,000 Hours
WPR3-UNVL-100-X-XX-BZ	3000K/4000K/5000K	104.5W	14,007 lm	134 LPW	100,000 Hours

QUBEPAK REGAL 3 (WPR3)

INSTALLATION INSTRUCTIONS

WARNING

- The installation must only be performed by a licensed electrician.
- To prevent death, injury or damage to property, this product must be installed in accordance to National Electric Code (NFPA70 in the US or Canadian Electrical Code (CSA22.1) in Canada.
- Disconnect power before installing the product or servicing it.
- Wait until fixture has cooled down before installing or servicing the fixture.
- Make sure that the fixture is grounded.
- Modification to the WPR3 fixture voids its warranty and UL Listing.
- Caution - Risk of fire.
- Min. 75°C supply conductor.
- Suitable for wet locations.
- Suitable for operation in ambient not exceeding 50°C.

INSTALLATION INSTRUCTIONS

1. Verify power is disabled.
2. Remove fixture from carton.
3. Loosen the two captive screws opposite the hinge side.
4. With hing to the left, open cover approximately 120 degrees and slide cover away, to remove cover from the hinge pins.
5. Feed wires from line power through applicable conduit holes and mount fixture base to wall according to local codes using appropriate mounting hardware. Junction box, conduit, conduit fittings and mounting hardware are not supplied. Use fittings suitable for wet location (Type 4 or 4x). Use UL Listed fittings.
6. Slide cover onto base by aligning hinges.
7. Mate LED module wire connections.
8. Reconnect ground wire.
9. Close cover, use caution not to pinch wires, and secure with two screws opposite the hinge.
10. Adjust angle as appropriate.
11. Energize fixture.

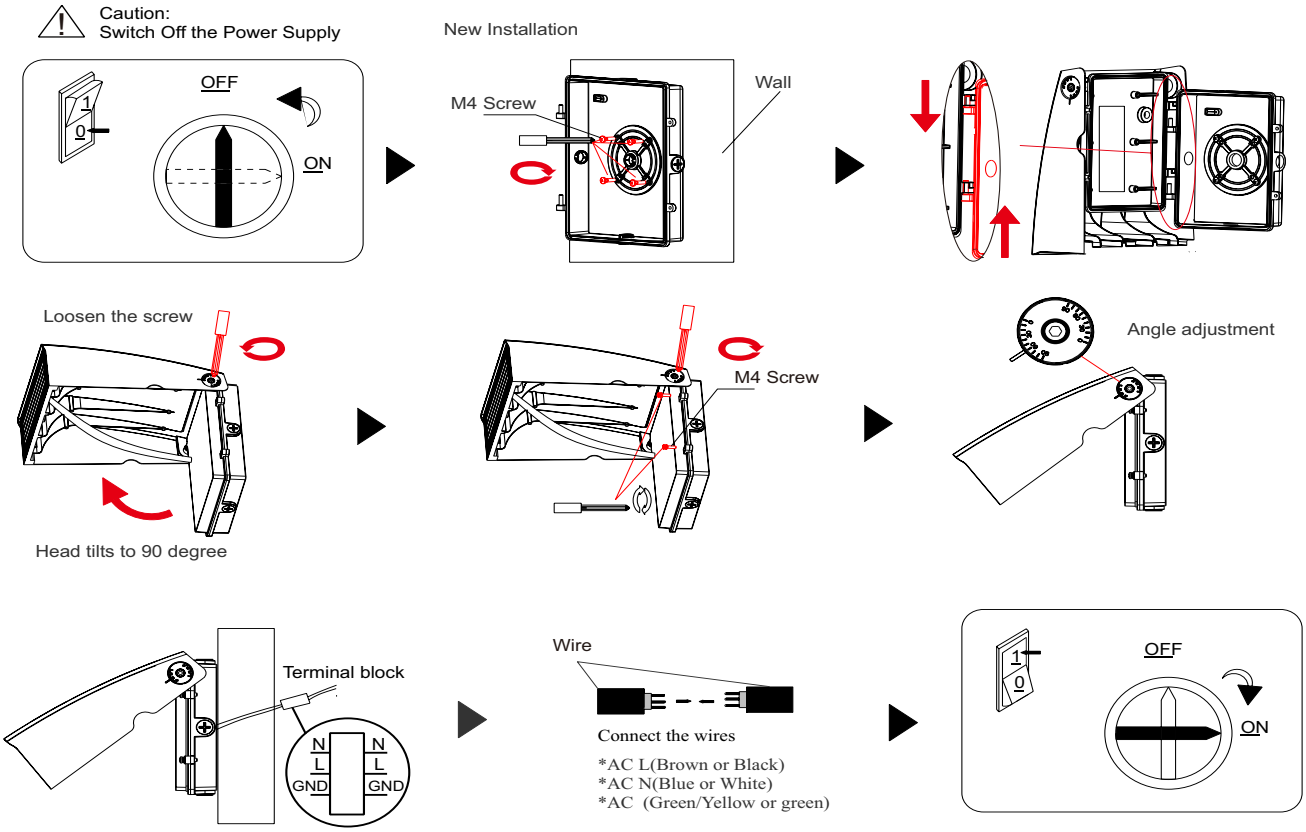

Specifications and dimensions subject to change without notice.

US LED | 6807 PORTWEST DR. | HOUSTON, TX 77024 | T 866 972 9191 | F 713 972 9393 | info@usled.com | **www.usled.com**

Project	Date

Catalog Number	Type

DoradoXLE 2

Outdoor LED Area/Site Luminaire

Key Features

- Outdoor applications benefit from superior photometric performance and uniformity.
- Low profile design provides a contemporary appearance and is night sky friendly.
- Precision molded optics are sealed to protect against environmental contaminants.
- Easy installation by one person in the field.
- Photocell and motion sensor accessories are available to be installed.

Electrical

- 120-277V or 347-480V available.
- 0-10V dimming standard.
- 10kV surge protection standard.
- System power factor >90% and THD <20%.
- Operating temperature: -30°C to +40°C (-30°F to +104°F)

Mounting

- Slip fitter, pole mount, or trunnion mounting options available.

Construction

- Robust die-cast aluminum housing protects integral components from harsh environments and optimizes thermal management.
- Housing is protected by a corrosion resistant powder coat finish.
- Standard dark bronze finish. Custom colors available by request.
- IP66 rated enclosure prevents intrusion from environmental elements that could degrade performance.

Optics

- IP67 rated LED light engine prevents dust or moisture from degrading performance.
- Precision molded optics available in Type II, Type III, Type IV, or Type V distributions.
- Industry leading LEDs with 3000K, 4000K, and 5000K CCT (minimum 70 CRI).
- Lumen Maintenance: >60,000 hours (L70) [1]

Warranty

- Product is backed by US LED's industry-leading Ten-Year Warranty.

Product Performance Summary

Lumen Output	Up to 40,030 lumens
Efficacy	Up to 156 LPW
CRI	≥ 70 CRI
Available CCT	3000K, 4000K & 5000K
Warranty	10-Year Warranty

Product Overview

The DoradoXLE 2 delivers an outstanding end-user experience by effortlessly combining outstanding photometric performance and long-lasting quality. It's designed to provide a superior one-to-one solution for replacing existing legacy lighting technology. With lumen packages ranging up to 40,000 lumens and multiple mounting options available, the DoradoXLE 2 can be a complete lighting solution for any outdoor application.

Product Applications

- Auto Dealerships
- Parking Lots
- Educational Facilities
- Business Campuses
- Recreational Areas
- Mall/Retail Areas
- Commercial Exteriors
- Industrial Facilities
- Security Areas
- Site Pathway Areas

Product Certifications/Approvals

- ETL Listed for US & Canada.
- Complies with UL1598 and CSA C22.2.
- DLC Premium Listed.
- Suitable for Wet Locations.
- IP66 Rated Enclosure.
- RoHS Compliant.

Ordering Information

Example: QDXLE2-200-50-UNVL-1-3-N-Z2-X1

QDXLE2 _____ _____ _____ _____ _____ _____ _____ _____ _____

Series	Model		CCT		Input Voltage		Finish		Optics		Photocell		Mounting		Driver		Accessories	
	100	100W	**30**	3000K	**UNVL**	120-277V	**1**	Bronze [2]	**2**	Type 2	**N**	No Photocell	**Z1**	Adjustable For Square Pole and Round Pole - 4" Nominal	**X1**	Standard	**BLS**	Back Light Shield
	120	120W	**40**	4000K	**UNVH**	347-480V			**3**	Type 3	**D1**	Photocell			**X2** [4]	High Temperature	**HSS**	House Side Shield
	150	150W	**50**	5000K					**4**	Type 4	**D2**	Motion Sensor	**Z2**	Slip Fitter				
	200	200W							**5**	Type 5			**Z3**	Trunnion				
	250	240W											**Z4**	For 2 3/8" Round Tenon				
	300	300W [3]																

1. US LED product 'Lifetimes' refer only to the LED light engine, not the power source, and are based on the Illuminating Engineering Society's TM21 Reported Lumen Maintenance methodology at a 25° C / 77° F ambient temperature. The lifetimes are solely meant to be a guide for expected LED degradation and not a warranty or predictive of their actual life, which can be affected by ambient temperatures and other factors.
2. Custom colors available upon request.
3. Recommended that 300W model should not to be used in operating temperatures beyond +35°C (95°F).
4. Consult factory.

DoradoXLE 2

Outdoor LED Area/Site Luminaire

USLED
Always the Right Choice!

Dimensions

Models 100W / 120W / 150W

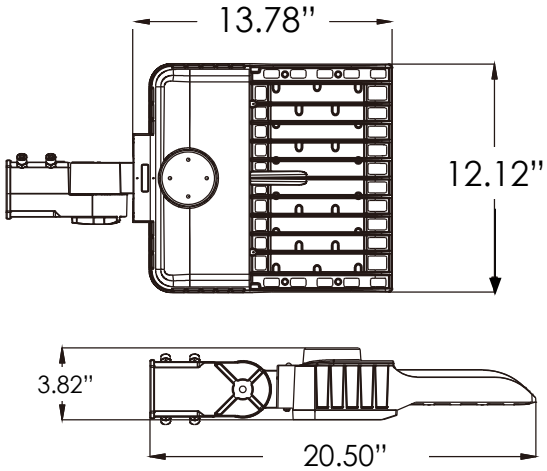

Net Weight	EPA Rating
10.46 lbs.	0.36

EPA (FT.^{2})	Configuration	Weight (lbs.)
0.36	1	11.46
0.72	2@180	22.92
0.62	2@90	22.92
0.98	3@90	34.38
0.87	3@120	34.38
0.98	4@90	45.84

Models 200W / 240W / 300W

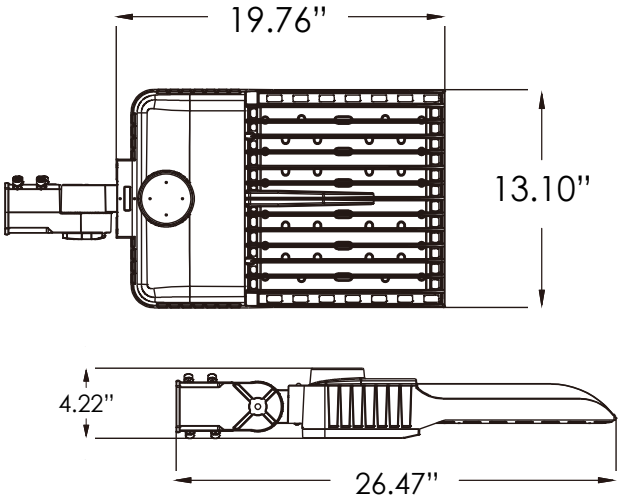

Net Weight	EPA Rating
20.00 lbs.	0.48

EPA (FT.^{2})	Configuration	Weight (lbs.)
0.48	1	20.00
0.96	2@180	40.00
0.79	2@90	40.00
1.27	3@90	60.00
1.33	3@120	60.00
1.27	4@90	80.00

DoradoXLE 2

Outdoor LED Area/Site Luminaire

Optical Distributions

All photometric testing performed to IESNA LM-79 standards by a NVLAP® accredited testing facility. ISO footcandle plots below demonstrate examples of the general distribution patterns based on a 25' mounting height. Please visit www.usled.com for complete specifications, IES files, and detailed photometric data.

Type II Distribution

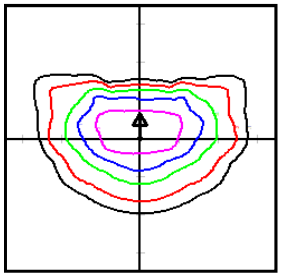

Type II distribution forms a wide, lateral asymmetric pattern typically used for applications needing narrow lighting. Examples might include car lot front rows, walkways, side streets, jogging paths, and entrances from the roadway.

Type III Distribution

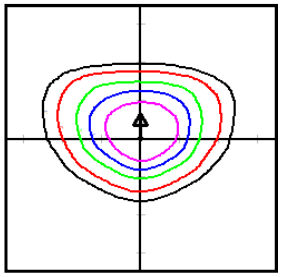

Type III distribution projects light evenly and equally forward on both sides in an "asymmetric" pattern. Commonly used in parking lots, wider roadways, and other applications where a larger area of lighting is required.

Type IV Distribution

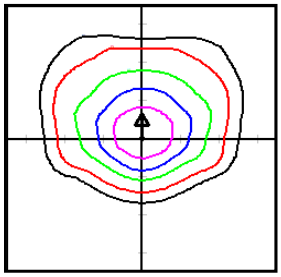

Type IV distribution is intended to maximize the amount of light going forward in a longer "semicircular" pattern. This optic is used around the perimeters of parking lots where there is no desire for wasted light behind the pole. It's also used for sport applications and parking areas on the sides of buildings.

Type V Distribution

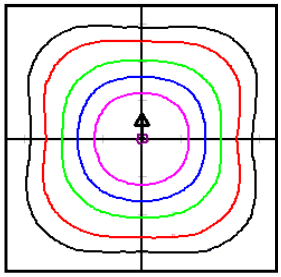

Type V distribution forms a symmetrical round or square pattern that allows the light to have the same intensity at all angles. Primarily used in parking lot interiors, crossroads, and roadway centers. It is also meant for large commercial parking lots where evenly distributed lighting is necessary.

Performance Data

Model	CCT	System Level Power	Delivered Lumens	Efficacy	L70 Calculate Life
100W	3000K	105.2 W	13,275 Lm	126 LPW	>60,000 Hours
	4000K	105.2 W	14,070 Lm	134 LPW	>60,000 Hours
	5000K	105.2 W	14,860 Lm	141 LPW	>60,000 Hours
120W	3000K	120.2 W	14,590 Lm	121 LPW	>60,000 Hours
	4000K	120.2 W	15,470 Lm	129 LPW	>60,000 Hours
	5000K	120.2 W	16,340 Lm	136 LPW	>60,000 Hours
150W	3000K	148.6 W	18,570 Lm	125 LPW	>60,000 Hours
	4000K	148.6 W	19,680 Lm	132 LPW	>60,000 Hours
	5000K	148.6 W	20,790 Lm	140 LPW	>60,000 Hours
200W	3000K	188.4 W	26,190 Lm	139 LPW	>60,000 Hours
	4000K	188.4 W	27,750 Lm	147 LPW	>60,000 Hours
	5000K	188.4 W	29,320 Lm	156 LPW	>60,000 Hours
240W	3000K	247.6 W	31,320 Lm	127 LPW	>60,000 Hours
	4000K	247.6 W	33,190 Lm	134 LPW	>60,000 Hours
	5000K	247.6 W	35,060 Lm	142 LPW	>60,000 Hours
300W	3000K	292.4 W	35,760 Lm	122 LPW	>60,000 Hours
	4000K	292.4 W	37,900 Lm	130 LPW	>60,000 Hours
	5000K	292.4 W	40,030 Lm	137 LPW	>60,000 Hours

DoradoXLE 2

Outdoor LED Area/Site Luminaire

Mounting Options

Z1 | Mount for Square Pole & Round Pole - 4” Nominal

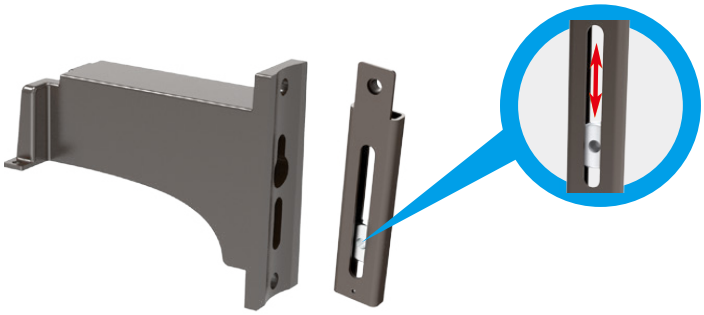

Z2 | Adjustable Slip Fitter Mount

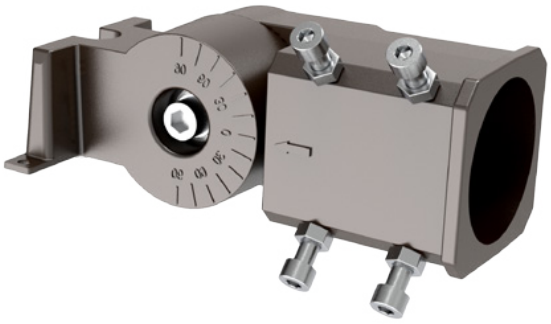

Z3 | Trunnion Mount

Z4 | Mount For 2 3/8” Round Tenon

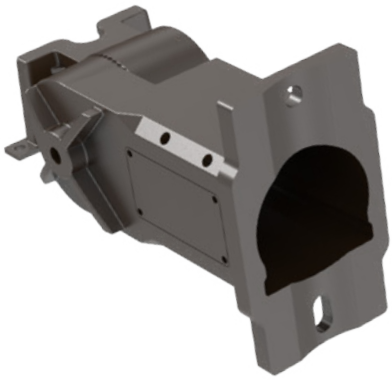

Accessories

BLS | Back Light Shield

HSS | House Side Shield

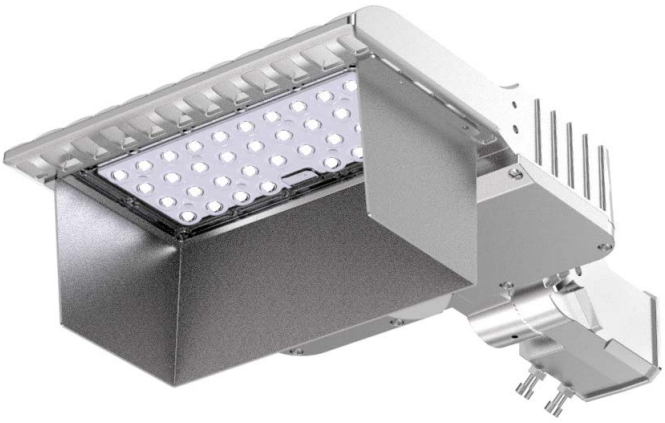

DoradoXLE2 (QDXLE2)

INSTALLATION INSTRUCTIONS

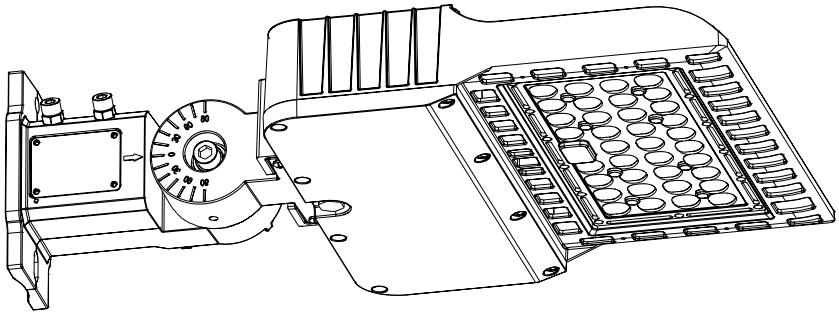

IMPORTANT SAFETY INSTRUCTIONS

- To reduce the risk of death, personal injury or property damage from fire, electric shock, falling parts,cuts/abrasions, and other hazards please read all warnings and instructions included with and on the fixture box and all fixture labels.
- Before installing, servicing, or performing routine maintenance up on this equipment, follow these general precautions.
- Installation and service of luminaires should be performed by a qualified licensed electrician.
- Maintenance of the luminaires should be performed by person(s) familiar with the luminaires' construction and operation and any hazards involved. Regular fixture maintenance programs are recommended.
- It will occasionally be necessary to clean the outside of the refractor/lens. Frequency of cleaning will depend on ambient dirt level and minimum light output which is acceptable to user. Refractor/lens should be washed in a solution of warm water and any mild, non-abrasive household detergent, rinsed with clean water and wiped dry.
- Should optical assembly become dirty on the inside, wipe refractor/lens and clean in above manner, replacing damaged gaskets as necessary.
- DO NOT INSTALL DAMAGED PRODUCT! This luminaire has been properly packed so that no parts should have been damaged during transit. Inspect to confirm. Any part damaged or broken during or after assembly should be replaced.
- These instructions do not purport to cover all details or variations in equipment nor to provide every possible contingency to meet in connection with installation, operation, or maintenance.

WARNING RISK OF ELECTRIC SHOCK

- Disconnect or turn off power before installation or servicing.
- Verify that supply voltage is correct by comparing it with the luminaire label information.
- Make all electrical and grounded connections in accordance with the National Electrical Code (NEC) and any applicable local code requirements.
- All wiring connections should be capped with UL approved recognized wire connectors.

WARNING RISK OF BURN

- Allow lamp/fixture to cool before handling.
- Do not touch enclosure or light source.
- Do not exceed maximum wattage marked on luminaire label.
- Follow all manufacturer's warnings, recommendations and restrictions for: driver type, burning position,mounting locations/methods, replacement and recycling.

WARNING RISK OF INJURY

- Wear gloves and safety glasses at all times when removing luminaire from carton, installing, servicing or performing maintenance.
- Avoid direct eye exposure to the light source while it is on.

WARNING RISK OF FIRE

- Keep combustible and other materials that can burn, away from lamp/lens.
- Do not operate in close proximity to persons, combustible materials or substances affected by heat or drying.

Specifications and dimensions subject to change without notice.

ON-OFF WIRING

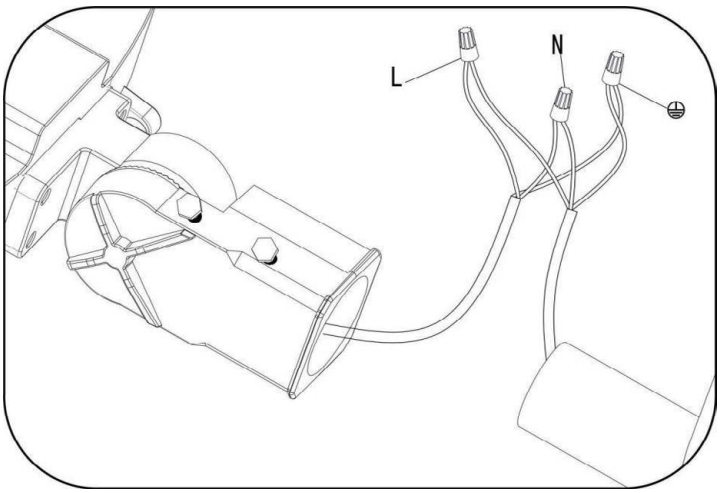

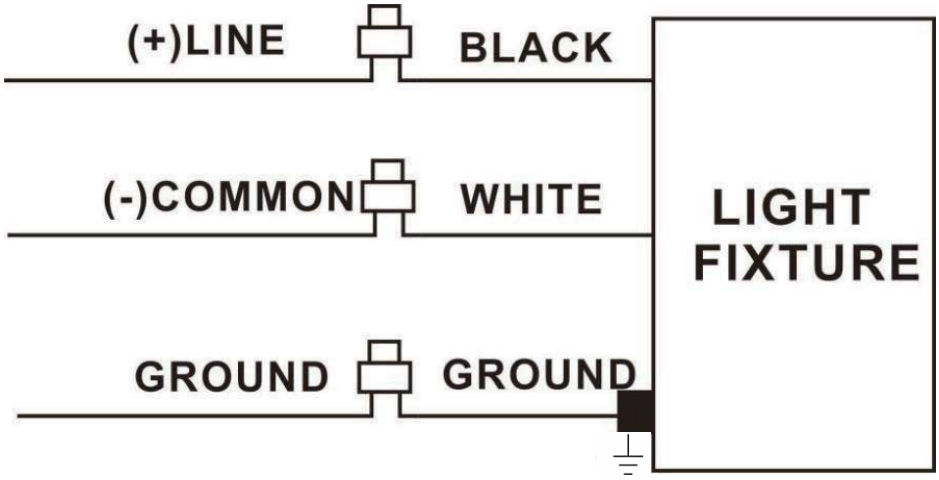

Make the wire connections outside the mounting arm. Refer to the wire diagram for power connections.
Step1: Connect the black fixture lead to the (+)LINE supply lead.
Step2: Connect the white fixture lead to the (-)COMMOM supply lead.
Step3: Connect the GROUND wire from fixture to supply lead.

DoradoXLE2 (QDXLE2)

INSTALLATION INSTRUCTIONS

SLI (Slip Fitter):

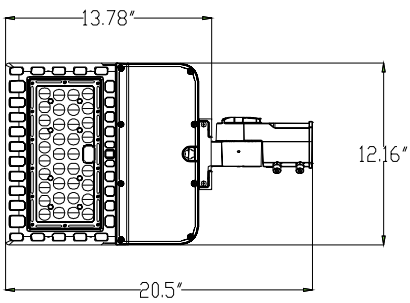

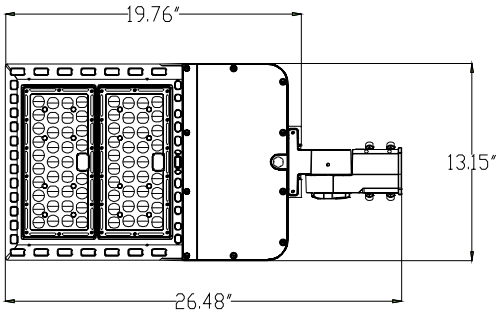

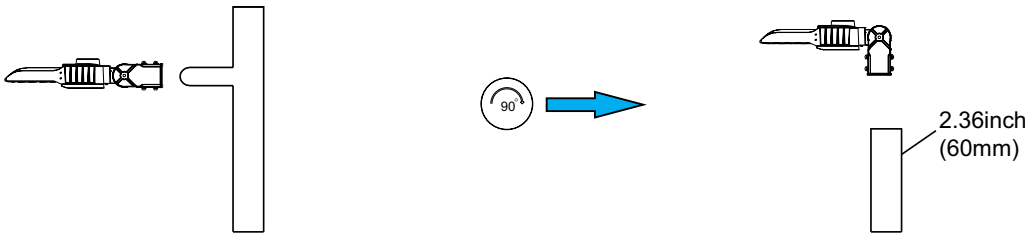

Step 1: Install the fixture with SLI to the tenon which is on the pole.
Step 2: Then tighten the screws.

TRU(Trunnion):

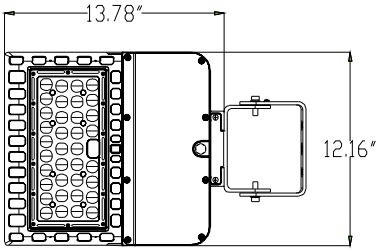

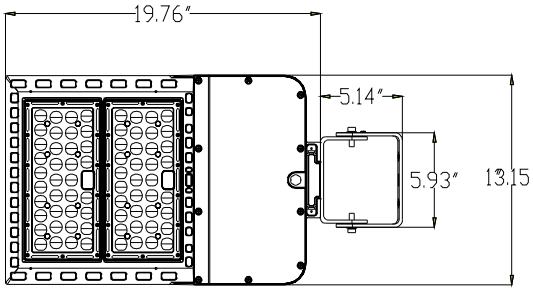

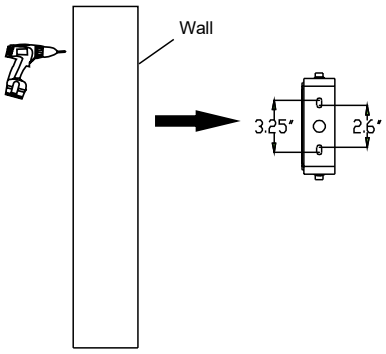

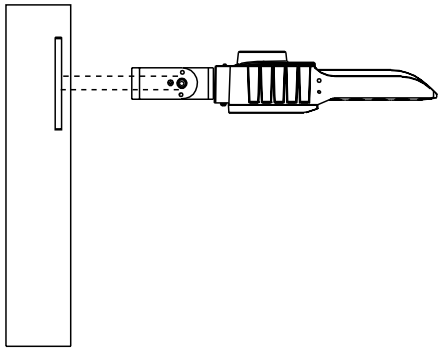

Step 1: Drilled on the wall or pole according to the measurement of hole on the bracket.
Step 2: Put the fixture with TRU on the wall and tighten the screws.

Specifications and dimensions subject to change without notice.

DoradoXLE2 (QDXLE2)

INSTALLATION INSTRUCTIONS

DAM-A/DAM-S(For 4″ diameter round pole&square pole):

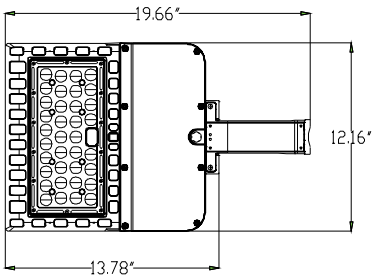

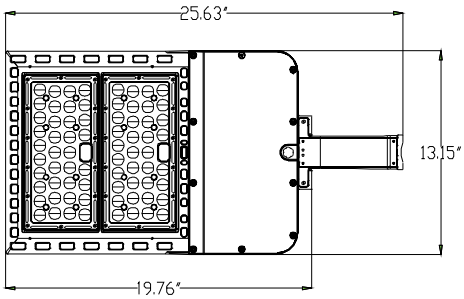

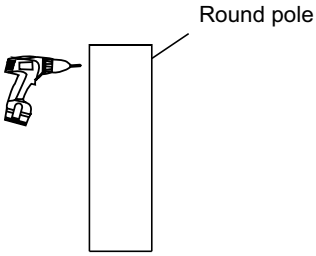

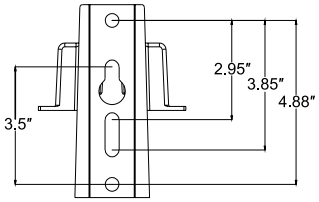

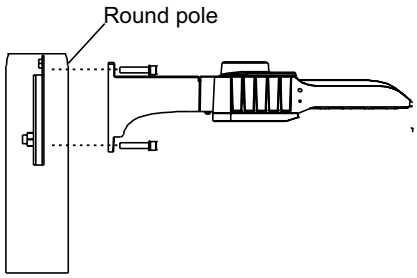

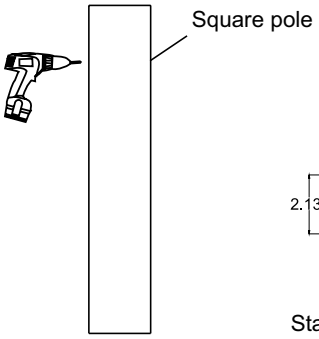

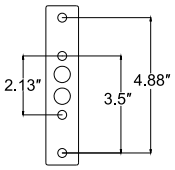

Standard Adaptor

OR

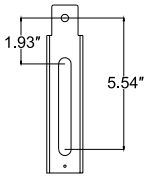

Adjustable Adaptor

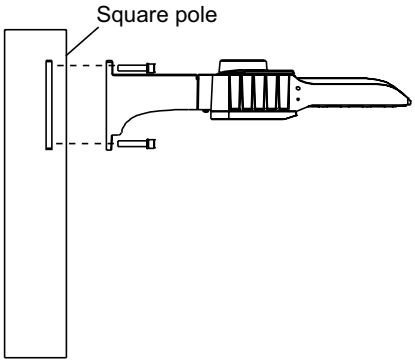

Step 1: Drilled on the pole according to the measurement of hole on the bracket.
Step 2: Put the adaptor （standard adaptor or adjustable adaptor） into the pole, then put the fixture with DAM on the pole and tighten the screws.

Specifications and dimensions subject to change without notice.

DoradoXLE2 (QDXLE2)

INSTALLATION INSTRUCTIONS

SH(All in one Mount):

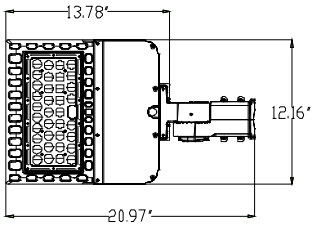

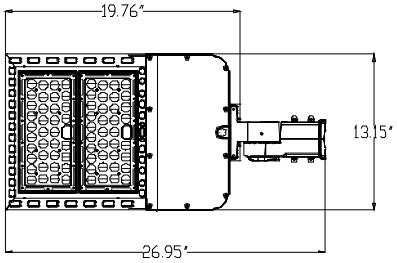

SHA(For 60mm round tenon):

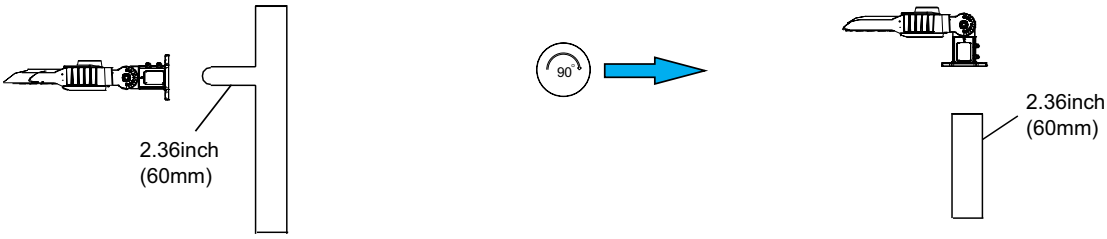

Step 1: Put the fixture with SHA on the bar which is on the pole.
Step 2: Then tighten the screws.

SHB(For 40mm round tenon):

Step 1: Put the fixture with SHB on the bar which is on the pole.
Step 2: Then tighten the screws.

SHC(For 50mm round tenon):

Step 1: Put the fixture with SHC on the bar which is on the pole.
Step 2: The tighten the screws.

Specifications and dimensions subject to change without notice.

DoradoXLE2 (QDXLE2)

INSTALLATION INSTRUCTIONS

SHD&SHE(For 4″ diameter round pole&square pole):

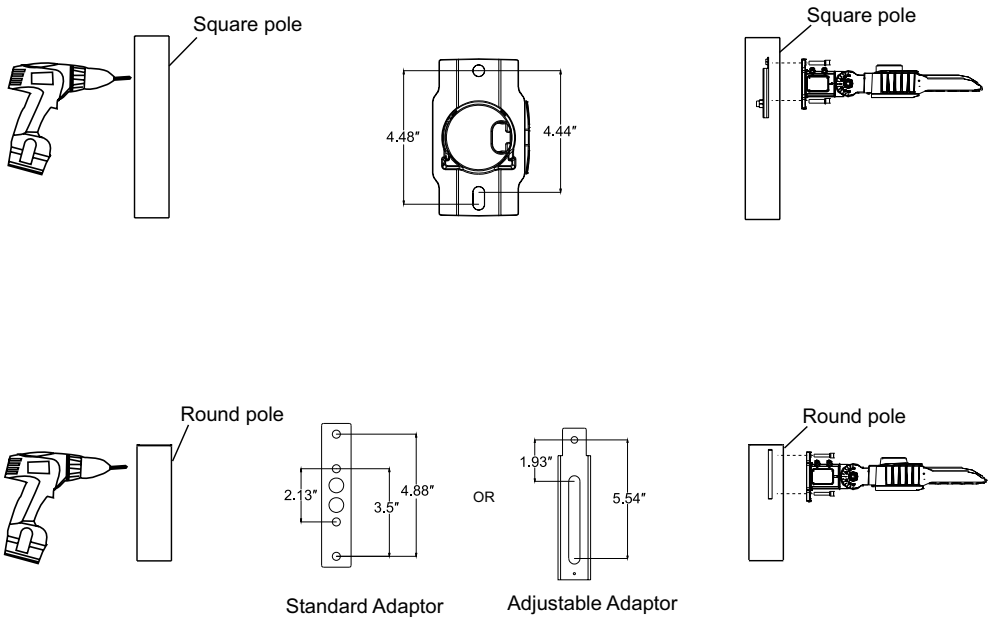

Step 1: Drilled on the pole according to the measurement of hole on the bracket.
Step 2: Put the fixture with SHD or SHE on the Pole and tighten the screws.

U Bracket:

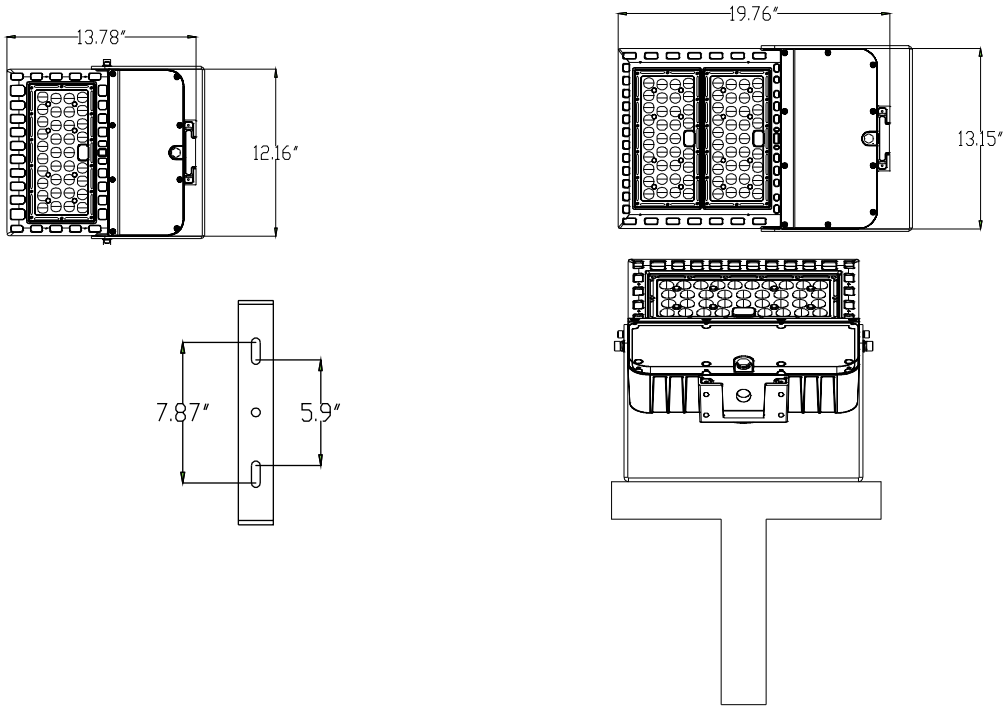

Step 1: Drilled on the pole according to the measurement of hole on the bracket.
Step 2: Put the fixture with U Bracket on the Pole and tighten the screws.

Specifications and dimensions subject to change without notice.

LED Thermoplastic Exit Combo

Always the Right Choice!

Combining LED exit illumination with reliable LED lamp heads, this attractive low-profile design offers maintenance-free, long life dependable service. Easily mounts above doors and in restricted spaces to fit any application.

FEATURES

- Easy to install, snap together design
- Suitable for damp location
- Rugged, injection-molded UL94 V-0 flame retardant, high-temperature thermoplastic housing
- Universal style – includes 2 face plates, a back plate and mounting canopy
- LED combo exit where each of the lamp heads contain 12 long lasting, efficient, ultra-bright white LEDs
- Charge rate/power "ON" LED indicator light with test button
- Low voltage disconnect eliminates deep discharge
- Brown-out, short circuit and voltage surge protection
- UL recognized maintenance-free NiCad battery
- Universal J-Box mounting system – Ceiling, wall or end mount
- UL listed 90 minute emergency run time, 24 hour recharge time
- Constant, uniform illumination by long-life, high intensity, red or green LEDs
- Overcharge protection
- Fully-illuminated 6" characters with 3/4" stroke
- Optional Self Test/Self Diagnostics (SDT) available
- Remote capable- up to 2 CLED remote heads
- Chevron-style, universal arrow knockouts
- 120/277V dual primary, 60Hz input
- Standard finishes: Black and white

DIMENSIONS

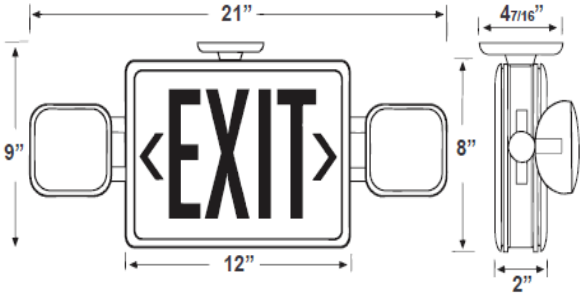

WARRANTY

Any component that fails due to manufacturers defect is guaranteed for 3 years with a separate 5 year pro-rated warranty on the battery. The warranty does not cover physical damage, abuse or acts of God. Manufacturer reserves the right to charge for such repairs if deemed necessary.

ORDERING INFORMATION

Series	Style	Finish	Type	Options
04-CRW2-LED	2 = UNIVERSAL	W = WHITE	LED Lamps	SDT = SELF TEST / DIAGNOSTICS
04-CGW2-LED		B = BLACK		RC = REMOTE CAPABILITY

US LED | 6807 PORTWEST DRIVE | HOUSTON, TX 77024 | T 713 972 9191 | F 713 972 9393 | www.usled.com

LED Emergency Light

Always the Right Choice!

HOUSING

- Injection-molded, engineering grade, 5VA flame retardant, high-impact resistant, thermoplastic in white or black finish.

OPTIONS

- SDT: Self-diagnostic feature performs monthly, biannual, and annual tests to ensure reliable operation and meet electrical and life safety codes.
- HL: 12-LEDs per head provide increased center-to-center spacing.
- SPV: UL Listed for special voltage option.

WARRANTY / LISTING

- Five year warranty on all electronics and housing. Battery pro rated for five years.
- Meets UL924, NFPA 101 Life Safety Code, NEC, OSHA, Local and State Codes.
- UL Listed for damp locations (0°C – *50°C*).

ILLUMINATION

- Long lasting, efficient, ultra bright white LED lamp heads.
- 1W (8 LEDs x 0.125) per head.
- High performance chrome-plated metallized reflector and plastic lens for optimal light distribution.
- Adjustable LED lamp heads provides optimal center-to-center spacing. High-lumen option available for increased center-to-center spacing.

ELECTRICAL

- Dual 120/277 voltage standard. Optional multi-tap 208/220/240 voltage available.
- Remote capacity standard.
- Charge rate/power "ON" LED indicator light and push-to-test switch for mandated code compliance testing.
- 3.6V long life, maintenance-free, rechargeable NiCd battery.
- Internal solid-state transfer switch automatically connects the internal battery to LED lamp heads for minimum 90-minute emergency illumination.
- Fully automatic solid-state, two rate charger initiates battery charging to recharge a discharged battery in 24 hours.

MOUNTING

- Surface mount via easy connect back plate, which fits most standard junction boxes and snaps into place making internal electrical connections.
- Top and side knockout for conduit applications.
- Suitable for wall or ceiling mount.

DIMENSIONS

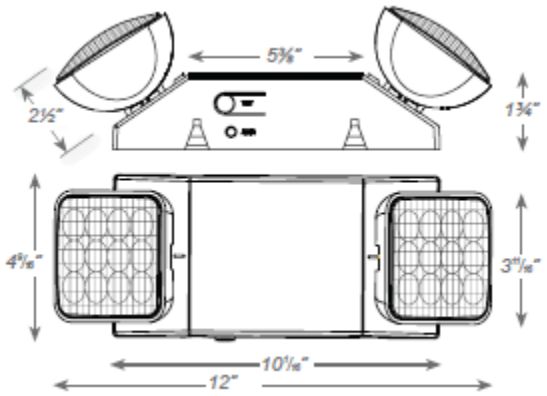

ORDERING INFORMATION

MODEL	HOUSING COLOR	OPTIONS
04-EL1-LED	White	SDT Self-Diagnostics
	B Black	HL High-Lumen
		SPV 208/220/240 volt, 50/60 Hz[1]

US LED | 6807 PORTWEST DRIVE | HOUSTON, TX 77024 | T 713 972 9191 | F 713 972 9393 | www.usled.com

LED Remote Heads

Indoor/ Outdoor Weatherproof

Always the Right Choice!

INDOOR

04-RHRLED

OUTDOOR WEATHERPROOF

INDOOR

OUTDOOR WEATHERPROOF

~ All voltages are available for INDOOR and OUTDOOR applications
~ 3.6 Volt (1 Watt) for Emergency Lights - Call for pricing
~ 9.6 Volt (1 Watt) for Exit Emergency Combos - Call for pricing
~ SDT available - Call for pricing

ILLUMINATION

- Long lasting, efficient ultra-bright white LED lamp heads.
- High-performance chrome-plated metalized reflector and plastic lens (indoor applications) or glass lens (outdoor applications) for optimal light distribution.
- Adjustable LED lamp heads increases center-to-center spacing with 8 LEDs in each lamp head.

ELECTRICAL

- Powered from low voltage power source with low voltage wiring (not provided).

MOUNTING

- Universal mounting base mounts to single-gang switch box.
- Distance of maximum run is determined by system voltage, wire gauge and total maximum wattage on the run.
- Suitable for wall or ceiling mount.

HOUSING

- Indoor application remote heads are injection-molded, engineering-grade, 5VA flame retardant, high-impact resistant, thermoplastic in white or black finish.
- Outdoor application remote heads are die-cast aluminum, Sealed and gasketed in gray or black finish.

WARRANTY/LISTING

- Five year warranty on electronics and housing.
- UL listed with approved Best Lighting Products.
- Meets UL924, NFPA 101 Life Safety Code, NEC,OSHA, Local and State Codes.

US LED | 6807 PORTWEST DRIVE | HOUSTON, TX 77024 | T 713 972 9191 | F 713 972 9393 | www.usled.com

SSS

Square Straight Steel Pole
No Arm — 4-Bolt Base

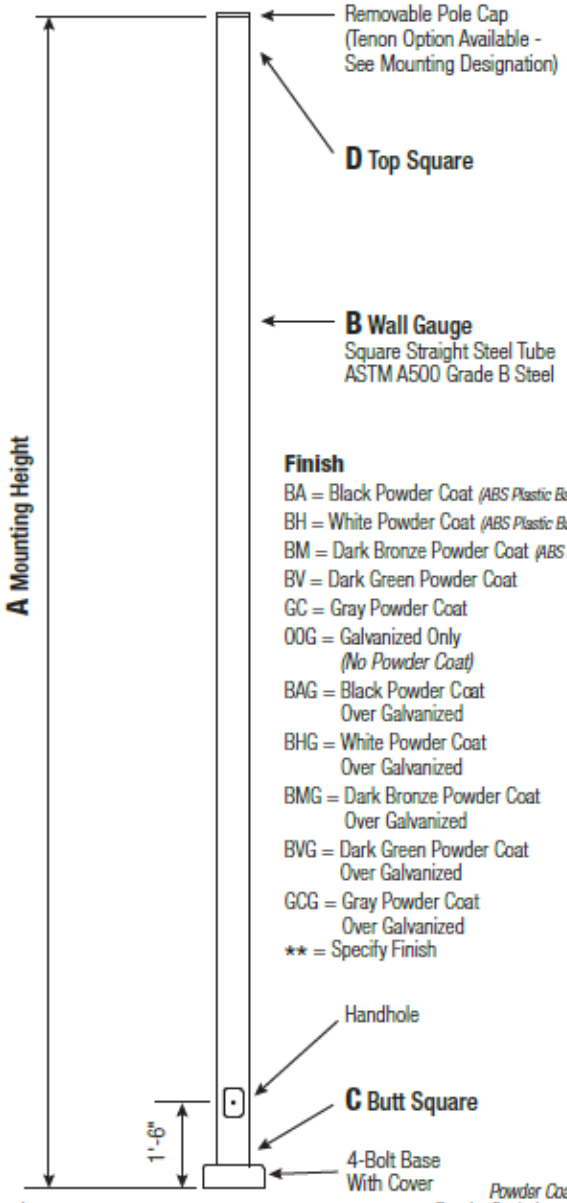

Finish

BA = Black Powder Coat *(ABS Plastic Base Cover)*
BH = White Powder Coat *(ABS Plastic Base Cover)*
BM = Dark Bronze Powder Coat *(ABS Plastic Base Cover)*
BV = Dark Green Powder Coat
GC = Gray Powder Coat
OOG = Galvanized Only *(No Powder Coat)*
BAG = Black Powder Coat Over Galvanized
BHG = White Powder Coat Over Galvanized
BMG = Dark Bronze Powder Coat Over Galvanized
BVG = Dark Green Powder Coat Over Galvanized
GCG = Gray Powder Coat Over Galvanized
** = Specify Finish

WARNING:
Do not install light pole without luminaire.

Powder Coated, Galvanized or Powder Coated over Galvanized Finish Per Customer Specification.

A Mtg. Hgt.	B Wall Gauge	C Butt Square	Total Lum. Weight	Maximum EPA 90	100	110	120	130	140	Catalog Number
20	11	4	85	10.0	7.2	6.4	4.7	3.3	2.2	SSS20B4-4-**

C Butt Sq.	D Top Sq.	F Bolt Cir. Dia.	G Base Sq.	H Bolt Proj.	I Bolt Size
4	4	8 - 9	8	3.75	.75 x 17 x 3

Dimensions in Inches

Customer Name:			
Project:		Location:	
Notes:			Quantity:

SSS20B4-4 - [ ]

CATALOG NUMBER — FINISH

Pole

Pole shaft shall be weldable-grade, cold-rolled, 11 gauge commercial quality carbon steel tubing conforming to ASTM A500 Grade B. All welds shall conform to AWS D1.2 using ER70S-6 electrodes.

Base Style

4-Bolt Steel Plate Base Flange of fabricated hot rolled carbon steel conforming to ASTM A36 or equivalent (36 ksi minimum yield) with 2-piece Base Cover and attaching hardware. Base Cover will be fabricated from ABS plastic or metal materials.

Handhole

Reinforced, 3" x 5" Handhole with Cover, Stainless Steel Screw and Backbar. A Grounding Provision incorporating a tapped 1/2"-13NC hole will be welded to the handhole frame.

Anchorage

Anchorage Kit will include four (4) L-shaped Steel Anchor Bolts conforming to AASHTO M314-90 Grade 55. Ten inches (10") of threaded end will be galvanized per ASTM A153. Kits will contain eight (8) Hex Nuts, four (4) Lock Washers, and eight (8) Flat Washers (all components Galvanized Steel). A bolt circle template will be provided.

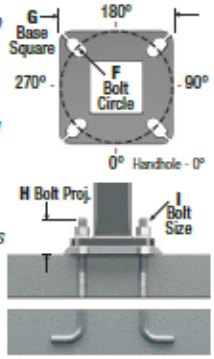

Vibration Damper

If determined necessary by Hapco, a top-mount, field installed First Mode Vibration Damper will be provided. Customer specification of the damper is available.

Mounting Designation

Side Drill Mount *- For Side Drill Mount applications specify luminaire type, quantity and orientation. A luminaire drilling template must be supplied at time of order.*

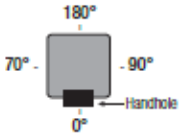

Tenon Mount *- For Tenon Mount applications specify both Tenon diameter (2.375", 2.875", 3.5", 4", etc.) and length (3", 4", 5", 6", etc.).*

EPA Notes:
Effective Projected Area (EPA) in square feet. EPA's calculated using wind velocity (mph) indicated in accordance with 2009 AASHTO LTS-5 using a 25 year design life. Maximum EPA is based on the luminaire weight shown. Increased luminaire weight may reduce the maximum EPA. If weight is exceeded, or if other design life or code is required, please consult the factory.

USLED™
Always the Right Choice!

Mounting Options

Slip-Fit Mount or S-Mount option

US-4-V-SingleTA, 4” single square vertical tenon

US-Double-S-180-4-BZ, Twin square vertical tenon for 4" Square pole. Two 2 3/8" vertical tenons

PS-MOUNT-BZ POLE MOUNT